C-A D Engineering Design Support Documentation Cover Page

Document number: 010604188 CAL-01	
Title: Relief Vacuum Volume Sphenix solenoid cryostat system	**Author**: R. Than
Subject: Sphenix solenoid cryostat	
C-A Department Group: Cryogenic Systems Group	**Checked by:** **Approval:**
Documentation Type [ ] **Written Technical Paper** [ ] **Design Calculations** [ ] **Design Review Presentation** [x] **Design Certification** [ ] **Specification** [ ] **Procurement Documentation** [ ] **Safety/ALARA Review Presentation** Other	**Equipment Type** [ ] **Magnets and Power Supplies** [ ] **Vacuum Systems** [ ] **RF Systems** [x] **Cryogenic Systems** [ ] **Experimental Equipment** [ ] **Beam Instrumentation** [ ] **Water Systems** [ ] **Buildings, Structures, and Shielding** Other
Equipment Location:	**Associated information for cataloging**
[ ] Tandem Van DeGraff	[ ] CA-D Design Room Job No.
[ ] Linac	
[ ] Booster	[ ] CA-D Design Room Drawing No
[ ] AGS	
[ ] RHIC	[ ] CA-D Specification No
[x] 912 Experimental Area	
[ ] 919 Experimental Area	[ ] C-AD Experiment No.
[ ] RHIC Experimental Area	
	[ ] Other
[ ] Buildings Structures, and Shielding	
Other	

BROOKHAVEN NATIONAL LABORATORY
COLLIDER-ACCELERATOR DEPARTMENT
CRYOGENIC SYSTEMS GROUP

Doc. No.: 010604188 **C**AL-01
Issued Date: June 2015__
Rev. No. A_____

Relief for Vacuum Volume Sphenix solenoid cryostat system

6/22/15	A		R. Than		P.Orfin					
Date	**Rev.**	**Change Notes**	**By**	**By**	**Checked**	**Approved**	**Reviewed**	**Reviewed**	**Reviewed**	**Reviewed**

REVISION HISTORY

1 RELIEF REQUIREMENT and SUMMARY

This engineering document evaluates the insulating vacuum volume relief of the cryostat. It includes the review of the original reliefs calculations by the manufacturer, ANSALDO S.A. in Italy.

The manufacturer if the cryostat followed standard CGA S-1.3 §6.4.2, which sizes the MNFA based on the volume of the cryostat, and not based on a directly explicitly determined heat load.
The included calculations in this document evaluate the heat load into the released cryogen and evaluates the required relief capacity and relief condition.

CALCULATIONS	**Load**	**Results**	**Setpoint Or MAWP pressure**	Calcs By ANSALDO	Calcs By BNL
CGA S-1.3 §6.4.2		Required Net Flow Area 4000 mm2	1.6 bara	👍	
Release of all liquid helium inventory of 150 liters, into vacuum volume, followed by constant supply of flow from cryoplant system	355 kW @27K 14.7 psig	Available relief capacity for 100 mm diameter opening 450 kW@ 27K, 14.7 psig.	2 bara		👍

Summary
The case is for when there is a catastrophic failure and all of the liquid inventory is released at once. Due to the large warm surface area of the cryostat of 85m^2, and large differential temperature between warm surface and gas the heat transfer from free convection will be large. The pressure will rise to towards 15 psig inside the vacuum vessel for the lift plate opening on the vacuum vessel to have sufficient capacity to relief 355 kW of heat transfer into the cold gas. Because the vacuum volume is large and the liquid inventory is small compared to the vacuum volume, the released inventory needs to heat up before the helium reaches a pressure of 1 atm.

Once the pressure reaches 1 atm and the lift plate reliefs, the pressure will continue to climb, while cold gas is expelled. Inventory continues to warmup as the pressure rises. The gas exit temperature will rise above 27K, since that is the starting temperature when the relief plate lifts at 1 atm. As the inventory depletes while cold gas is expelled, the inventory warms up and the heat transfer reduces and the relief rate drops off.

Available relief capacity for of the ISO-K 100 flange: free flow area of 12.1 in^2.
P= 14.7 psig, 27K, Heat input capacity: 432kW, mass flux of 3.0 kg/s.

Relief requirements due to free convection heat transfer at 355 kW @ P= 14.7 psig, 27K (Conservative, temperature will be warmer, since the inventory continues to warm up).

2 HEAT LOAD AND SOURCE

Source

Source	Volume	Flowrate
Liquid from Reservoir+tubing+leadpots	139 Liters	Instantaneous release
Shield inventory / flow	22 Liters, cold vapor	Instantaneous release
Liquid helium supply from cryoplant.		24 g/s [LR140; 400W] 14 g/s [ERL 1660 Plant 250W]

There are many possible process paths starting from the initial thermodynamic state to the final allowable relief pressure state conditions. The path chosen has to be the path that gives the most conservative relief sizing requirement. The most conservative relief conditions is the case when the allowable working pressure has been reached, the relieving temperature is the lowest.

1. ***Determine how much the pressure would rise to, starting from vacuum, if all liquid helium inventory was released into the cryostat vacuum volume prior to any heat being added. This determines the initial condition of the transient.***

Vacuum Volume: $10m^3$
Liquid inventory released: 150 Liters, 17.8 kg
Starting density in cryostat vacuum space: 1.78 kg/m^3

Energy stream into volume: 17.8 kg x 11800 J/kg = 208600 J, Internal energy of inventory inside $10m^3$. With a liquid enthalpy of 11800 J/kg and mass of 17.8kg, the resulting state when expanded into a empty volume of 10 m^3 is density of 1.78 kg/m^3 at an internal energy u=11.8J/g and a pressure of 0.036 bar (2.06K). Initial condition before all liquid is evaporated: 0.036 bar, 2.06K, 51% vapor fraction 49% liquid fraction.

Hence additional heat is required to warm the cold helium to raise the pressure to 1 atm pressure after all liquid is evaporated.

Since the released density is less than saturated vapor density at 1 atm, all liquid will be evaporated/expanded before 1 atm is reached. Heat will be required to raise the pressure to 1 atmosphere.

2. ***Determine how much the inventory has warmed up when it has reached 1 atm pressure***.

Heat addition to the 17.9 kg of cold inventory to heat it to 1 atmosphere. Find the temperature corresponding to a density of 1.78 kg/m^3 and pressure of 1 atm. This gives a temperature if 27.36K just before the relief plate lifts. The temperature will give the conservative low temperature for relief condition.

3. ***Heat transfer to cold helium gas is calculated using free convection correlation for enclosed volume.***

As the density increases the heat transfer increases. The free convection duty was calculated to give a heat transfer duty of **238 kW for the 15 psia** and a heat transfer duty of **355 kW at 29.7psia and gas temperature of 27K.**

Determine how much the inventory has warmed up if no inventory is expelled until the MAWP of 2atm, 14.7 psig is reached. This gives roughly the coldest temperature when this pressure is reached. The temperature e reached with no inventory expelled is **54K at 29.7 psia.**
In reality the inventory gets expelled, as soon as the relief plate lifts at 15 psia. Thus the inventory will be less and the temperature of the helium in reality will be warmer when 2 atm is reached. The relief device duty capacity for the relief opening will be larger at higher temperatures.

A forced convective duty was calculated for continuous flow of 25 g/s of liquid helium into the cryostat supplied by the plant and is small compare to the free convection duty inside the cryostat volume.
The forced convection rate is much smaller than the free convection rate, due to small mass flux, i.e. the flow cross-section area is large compared to the flowrate, and free convection heat transfer dominates and the flow from the plant only contributes 10% to the total heat transfer duty.

1. INITIAL INVENTORY STATE

Psat	1.3	atm
Tsat	4.51	K
hliq	11.73	J/g
Density	118.60	kg/m3
Volume	0.150	m3

2. EXPANDED STATE

P	3,663	Pa
T	2.06	K
U	11.7276	J/g
Density	1.78	kg/m3
Volume	10	m3

3. STATE at after all liquid has been evaporated

P	0.080	atm
P	8090	Pa
T	2.38	K
h	26.57	J/g
u	22.02	J/g
Density	1.78	kg/m3

4. STATE at 1 ATM, after heat addition to reach 1 atm

P	1.00	atm
P	101325	Pa
T	27.36	K
u	100.18	J/g
Density	1.78	kg/m3

5. STATE at 2 ATM, after heat addition, no inventory vented

P	2.00	atm
P	202650	Pa
T	54.58	K
u	185.10	J/g
Density	1.78	kg/m3

The relief size is then determined from the heat transfer into the cold helium.
The relief has to handle the expansion of the helium inventory due to heat transfer from the warm cryostat walls and the flow of liquid coming from the plant of 0.025 kg/s.

2.1 Relief capacity

Available relief capacity for of the ISO-K 100 flange: free flow area of 12.1 in^2.
P= 14.7 psig, 27K, Heat input capacity: 432kW, mass flux of 3.0 kg/s.

Relief requirements due to free convection heat transfer at 355 kW @ P= 14.7 psig, 27K (Conservative, temperature will be warmer, since the inventory continues to warm up).

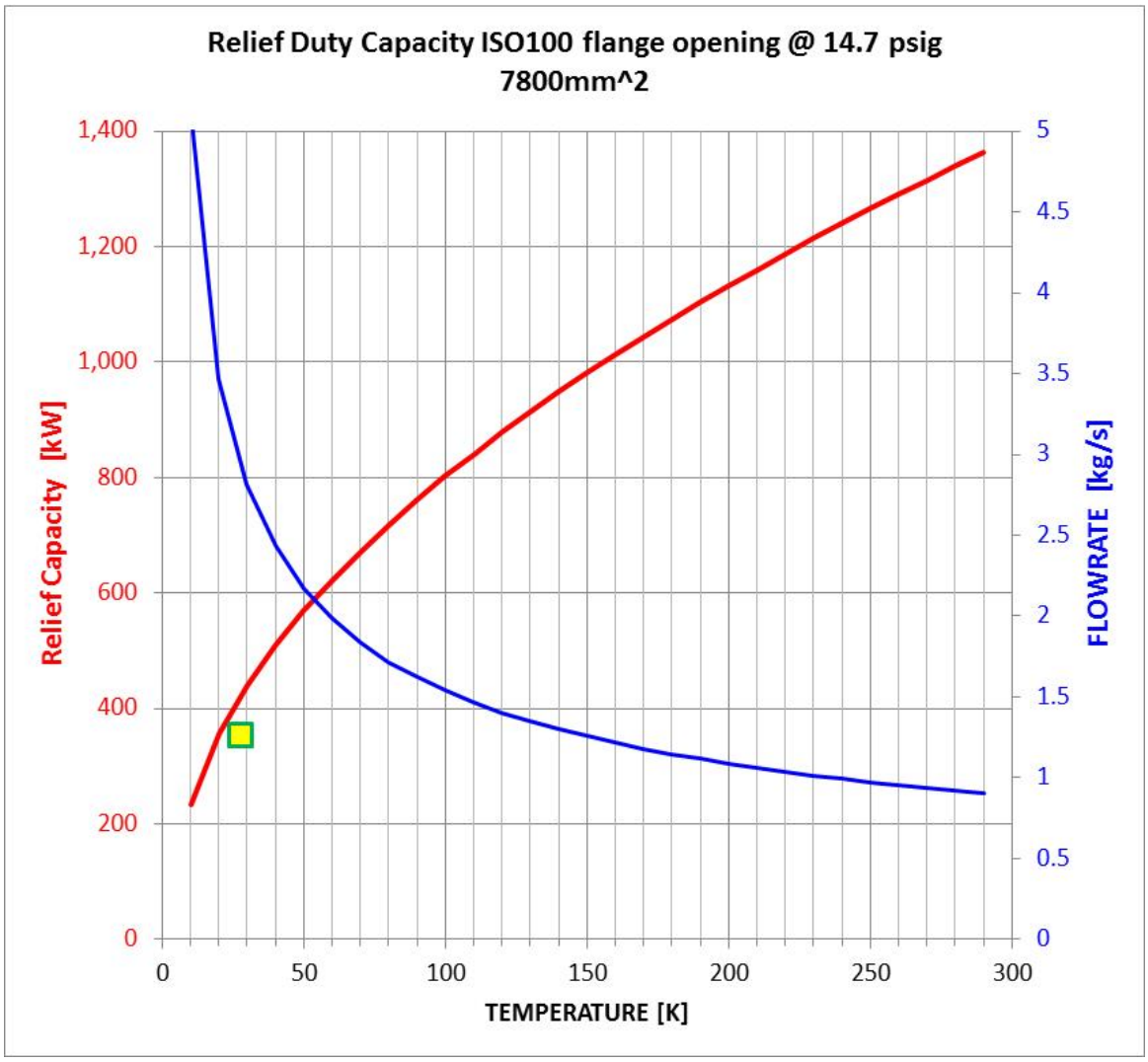

3

DIMENSIONIONAL and INVENTORY INFORMATION

3.1 Solenoid Cryostat Vacuum Vessel

3.1.1 Pressure Rating

Cryostat Vessel pressure rating
MAWP (Internal): 1 barg (2 bara) at 323K
MAEWP (External): 1 bar (0 bara) at 323K
MDMT: @ 15psi
Material: Aluminum 5083-0 Alloy

3.1.2 Dimensions: Solenoid Cryostat

Diameter outer cylinder: 3.490 m
Diameter inner cylinder: 2.860 m
Cylinder length: 3.790 m
Surface Outer Cylinder: 41.6 m^2.
Surface Inner Cylinder: 34.1 m^2.
Surface End plates: 6.28 m^2.
Surface area: 85 m^2.
Gross Volume: 11.9 m^3.
Coldmass volume: 2.1 m^3.
Net volume with coldmass: 9.8 m^3.

3.2 Reservoir/separator Vessel, Current-Lead pots, Mandrel cooling tubes

3.2.1 Pressure Rating

Vessels pressure rating
MAWP (Internal): 6 bar (30 psia) at 120°F
MAEWP (External): 1 bar (0 psia) at 120°F
MDMT: 4K @ 6 bar
Material: Stainless Steel 304L Alloy

3.2.2 Dimensions

3.2.2.1 Reservoir/separator Vessel

Diameter cylinder: 0.273 m
Cylinder length: 0.44 m
Surface area: 9.8 m^2.
Gross Volume: 26 liters

3.2.2.2 Current Lead Pot Vessel

Diameter cylinder: 0.149 m
Cylinder length: 0.367 m
Surface area: 0.2 m^2.
Gross Volume: 6 liters.

3.2.2.3 Solenoid Coil Mandrel cooling channels

Mandrel Diameter: 3.20 m
Parallel tubes: 11
Tube length: 5.1 m
Total Tube length: 110 m
Heat Transfer Surface area: 6.2 m^2.
Gross Volume: 92 liters.

HELIUM VOLUMES

1. The siphon reservoir and lead pots share the same pressure boundary, but are connected by piping. The solenoid mandrel cooling tubes are manifolded together and connects to the reservoir on the vapor/2phase return line. The supply side tubing between the reservoir and solenoid cooling circuit can be isolated by valves and thus communicates only on the return side for this case.
2. The thermal shield volume can be isolated by valves on inlet and outlet side.

Pressure Volumes

Volumes	Primary Helium volume 4.5K: Reservoir, mandrel cooling tubes and headers, interconnecting piping	Thermal Shield volume + tubing	Current Lead Pots
Volume Liters	Reservoir: 26 Liters Mandrel tubes/headers: 92 Liters Interconnect tubing: 21 Liters TOTAL: 139	22 Liters	5.8 Liters x2 = 12 Liters
Boundaries			
Boundary 1	Vapor return CV04	Shield inlet MV01	Liquid supply tube 10 mm
Boundary 2	Reservoir fill valve CV02	CV07 Shield return flow control valve	Vapor supply tube 10 mm
Boundary 3	Shield inlet MV01		Current lead warm end exit tube lead flow cooling
Boundary 4	Cooldown supply CV03		
Boundary 5	Warm gas supply CV01		
Boundary 6	Quench dump valve/ reliefs		

3.3 RELIEF DEVICE

The relief device is a dead weight lift plate, weighing about 3 lbs.
The blank flange is an ISO-K 100 flange. The stainless weight is 3 lbs.
Area: 12.6 in^2
The required lifting pressure is under 0.25 psig.

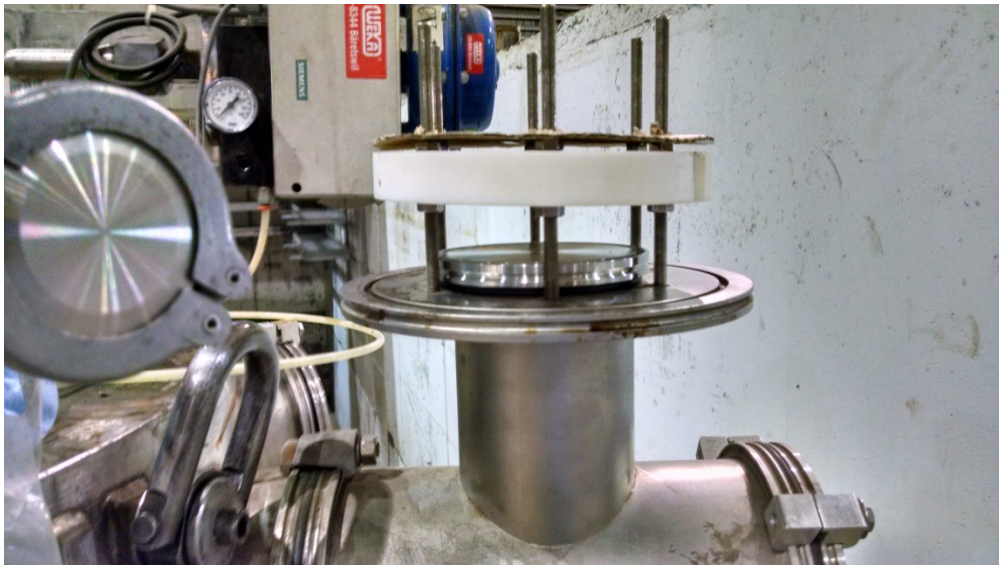

4 Calculations

4.1 Relief requirements at 14.7 psig cold gas expansion at 432 kW heat input

Helium Relief MNFA 12.8 in^2 relieving at 14.7 psig, 27K

$M_{he} := 0.0040026 \cdot \frac{kg}{mol}$ $\quad R_u := 8.314472 \cdot \frac{joule}{mol \cdot K}$ $\quad g_c := \frac{1 \cdot kg \cdot m}{N \cdot s^2}$

$Q_{Load} := 432000 \cdot W$ $\quad P_{rel} := 29.7 \cdot psi$ $\quad T_{rel} := 27.3 \cdot K$ $\quad P_{rel} = 2.048 \cdot bar$

$dHdV1 := VdHdVatP_{he}(P_{rel}, T_{rel})$ $\quad dHdV1 = 1.423 \times 10^5 \frac{m^2}{s^2}$

$m_{rel} := \frac{Q_{Load}}{dHdV1}$ $\quad m_{rel} = 3.037 \frac{kg}{s}$

$P_1 := P_{rel}$ $\quad P_1 = 2.021 \cdot atm$ $\quad P_2 := 1.02 \cdot atm$ $\quad P_2 = 14.99 \cdot psi$

$DP := P_1 - P_2$ $\quad DP = 14.71 \cdot psi$

$K_d := 0.620$ $\quad \gamma_{1he} := 1.666$ $\quad Z_v := 1.0$

$$F_{sub} := \sqrt{\frac{2 \cdot \gamma_{1he}}{\gamma_{1he} - 1} \cdot \left[\left(\frac{P_2}{P_1}\right)^{\frac{2}{\gamma_{1he}}} - \left(\frac{P_2}{P_1}\right)^{\frac{\gamma_{1he}+1}{\gamma_{1he}}} \right]} = 0.726$$

$$A_{MNFA} := \frac{m_{rel} \cdot \sqrt{T_{rel} \cdot Z_v} \cdot \sqrt{R_u}}{K_d \cdot P_1 \cdot F_{sub} \cdot \sqrt{M_{he}} \cdot \sqrt{g_c}}$$ $\quad A_{MNFA} = 78.496 \cdot cm^2$ $\quad A_{MNFA} = 12.167 \cdot in^2$

$$F_{choked} := \sqrt{\gamma_{1he} \left(\left(\frac{2}{\gamma_{1he} + 1} \right) \right)^{\left(\frac{\gamma_{1he}+1}{\gamma_{1he}-1} \right)}}$$ $\quad F_{choked} = 0.726$

4.2 Free convection heat transfer warm wall to cold gas at 15 psia

Free Convection heat transfer from enclosed volume Horizontal annulus warm surface to cold helium gas. 14.7 psia, 27K

$T_{wall} := 290 \cdot K$ $T_{cold} := 27K$ $L_{solenoid} := 3.79 \cdot m$ $R_o := 3.4 \cdot m$ $R_i := 3.35 \cdot m$

$P_{Helium} := 1.0 \cdot atm$ $g_{si} := 9.81 \cdot \frac{m}{s^2}$

$Dia_{hyd} := R_o - R_i$ $Dia_{hyd} = 0.05\,m$

$T_{film} := \frac{(T_{wall} + T_{cold})}{2}$ $T_{film} = 158.5\,K$

$\beta := \frac{expans_{he}(P_{Helium}, T_{film})}{T_{film}}$ $\beta = 6.303 \times 10^{-3} \frac{1}{K}$

$Pr := Pr_{he}(P_{Helium}, T_{film})$ $Pr = 0.669$

$\mu_{film} := \mu_{he}(P_{Helium}, T_{film})$ $\mu_{film} = 1.297 \times 10^{-5} \cdot Pa \cdot s$

$\rho_{film} := \rho_{he}(P_{Helium}, T_{film})$ $\rho_{film} = 0.307 \frac{kg}{m^3}$

$k_{film} := k_{he}(P_{Helium}, T_{film})$ $k_{film} = 0.101 \frac{m \cdot kg}{K \cdot s^3}$

$\nu_{film} := \frac{\mu_{film}}{\rho_{film}}$ $\nu_{film} = 4.217 \times 10^{-5} \frac{m^2}{s}$

$Gr_\delta := \frac{g_{si} \cdot \beta \cdot (T_{wall} - T_{cold}) \cdot Dia_{hyd}^3}{\nu_{film}^2}$ $Gr_\delta = 1.143 \times 10^6$

$C1 := 0.11$ $n1 := 0.29$ $m1 := 0$

$k_e := k_{film} \cdot C1 \cdot (Gr_\delta \cdot Pr)^{n1} \cdot \left(\frac{L_{solenoid}}{Dia_{hyd}}\right)^{m1}$

$q_{free} := \frac{2 \cdot \pi \, k_e \cdot L_{solenoid} \cdot (T_{wall} - T_{cold})}{\ln\left(\frac{R_o}{R_i}\right)}$ $q_{free} = 2.379 \times 10^5\,W$

4.3 Free convection heat transfer warm wall to cold gas at 29.7 psia

Free Convection heat transfer from enclosed volume Horizontal annulus warm surface to cold helium gas. 29.7 psia, 27K

$T_{wall} := 290 \cdot K$ $T_{cold} := 27K$ $L_{solenoid} := 3.79 \cdot m$ $R_o := 3.4 \cdot m$ $R_i := 3.35 \cdot m$

$P_{Helium} := 2.0 \cdot atm$ $g_{si} := 9.81 \cdot \frac{m}{s^2}$

$Dia_{hyd} := R_o - R_i$ $Dia_{hyd} = 0.05\,m$

$T_{film} := \frac{(T_{wall} + T_{cold})}{2}$ $T_{film} = 158.5\,K$

$\beta := \frac{expans_{he}(P_{Helium}, T_{film})}{T_{film}}$ $\beta = 6.297 \times 10^{-3} \frac{1}{K}$

$Pr := Pr_{he}(P_{Helium}, T_{film})$ $Pr = 0.669$

$\mu_{film} := \mu_{he}(P_{Helium}, T_{film})$ $\mu_{film} = 1.298 \times 10^{-5} \cdot Pa \cdot s$

$\rho_{film} := \rho_{he}(P_{Helium}, T_{film})$ $\rho_{film} = 0.614 \frac{kg}{m^3}$

$k_{film} := k_{he}(P_{Helium}, T_{film})$ $k_{film} = 0.101 \frac{m \cdot kg}{K \cdot s^3}$

$\nu_{film} := \frac{\mu_{film}}{\rho_{film}}$ $\nu_{film} = 2.112 \times 10^{-5} \frac{m^2}{s}$

$Gr_\delta := \frac{g_{si} \cdot \beta \cdot (T_{wall} - T_{cold}) \cdot Dia_{hyd}^3}{\nu_{film}^2}$ $Gr_\delta = 4.552 \times 10^6$

$C1 := 0.11$ $n1 := 0.29$ $m1 := 0$

$k_e := k_{film} \cdot C1 \cdot (Gr_\delta \cdot Pr)^{n1} \cdot \left(\frac{L_{solenoid}}{Dia_{hyd}}\right)^{m1}$

$q_{free} := \frac{2 \cdot \pi \, k_e \cdot L_{solenoid} \cdot (T_{wall} - T_{cold})}{\ln\left(\frac{R_o}{R_i}\right)}$ $q_{free} = 3.555 \times 10^5\,W$

4.4 Forced convection heat transfer warm wall to cold gas at 30 psia, @ 25 g/s

Helium Heat Transfer to cold gas, 6K at 30 psia in annulus gap between 293K cryostat wall and shield
Forced convection check

$P_{Helium} := 2.0 \cdot atm \quad T_{wall} := 290 \cdot K \quad T_{cold} := 6K \quad g_{si} := 9.81 \cdot \frac{m}{s^2}$

$Flow_{He} := 0.025 \cdot \frac{kg}{s}$

$W_{gap} := 0.04 \cdot m \quad L_{gap} := 3.8 \cdot m$

$PerimeterGap := 2 \cdot W_{gap} + 2 \cdot L_{gap} \quad AGapcross := W_{gap} \cdot L_{gap}$

$Dia_{hyd} := 4 \cdot \frac{AGapcross}{PerimeterGap} \quad Dia_{hyd} = 0.079\,m$

$T_{film} := \frac{(T_{wall} + T_{cold})}{2} \quad T_{film} = 148\,K$

$Pr_{film} := Pr_{he}(P_{Helium}, T_{film}) \quad Pr = 0.67 \quad Pr_{bulk} := Pr_{he}(P_{Helium}, T_{cold}) \quad Pr_{bulk} = 1.061$

$\mu_{film} := \mu_{he}(P_{Helium}, T_{film}) \quad \mu_{film} = 1.24 \times 10^{-5} \cdot Pa \cdot s$

$\rho_{film} := \rho_{he}(P_{Helium}, T_{film}) \quad \rho_{film} = 0.658 \frac{kg}{m^3}$

$k_{film} := k_{he}(P_{Helium}, T_{film}) \quad k_{film} = 0.096 \frac{m \cdot kg}{K \cdot s^3}$

$\nu_{film} := \frac{\mu_{film}}{\rho_{film}} \quad \nu_{film} = 1.885 \times 10^{-5} \frac{m^2}{s}$

$\mu_{cold} := \mu_{he}(P_{Helium}, T_{cold}) \quad \mu_{cold} = 1.739 \times 10^{-6} \cdot Pa \cdot s$

$\mu_{wall} := \mu_{he}(P_{Helium}, T_{wall}) \quad \mu_{wall} = 1.948 \times 10^{-5} \cdot Pa \cdot s$

$Re_{bulk} := \frac{Flow_{He} \cdot Dia_{hyd}}{AGapcross \cdot \mu_{cold}} \quad Re_{bulk} = 7.487 \times 10^3$

$f_{friction} := (1.82 \cdot \log(Re_{bulk}) - 1.64)^{-2} \quad f_{friction} = 0.034$

$$Nu_d := \frac{\left(\frac{f_{friction}}{8} \cdot Re_{bulk} \cdot Pr_{bulk}\right)}{1.07 + 12.7 \cdot \left(\frac{f_{friction}}{8}\right)^{0.5} \cdot \left(Pr_{bulk}^{0.667} - 1\right)} \cdot \left(\frac{\mu_{cold}}{\mu_{wall}}\right) \quad Nu_d = 2.744$$

$h_{convect} := \frac{Nu_d \cdot k_{film}}{Dia_{hyd}} \quad h_{convect} = 3.332 \frac{W}{m^2 \cdot K}$

5 References

1. Lehmann and Zahn, "Safety Aspects for LHe Cryostats and LHe Transport Containers", ICEC7, London, 1978.
2. ISO 21013-3:2006 Cryogenic vessels -- Pressure-relief accessories for cryogenic service -- Part 3: Sizing and capacity determination
3. ASME Section Boiler and Pressure Vessel Code Section VII. Div 1. 2007
4. API Recommended Practice 520
5. Hepak 3.40, Cryodata.
6. Andrew E. McLeod†, Eugene H. Bishop International Journal of Heat and Mass Transfer Volume 32, Issue 10, October 1989, Pages 1967–1978. *Turbulent natural convection of gases in horizontal cylindrical annuli at cryogenic temperatures.*

SOLENOID CRYOSTAT

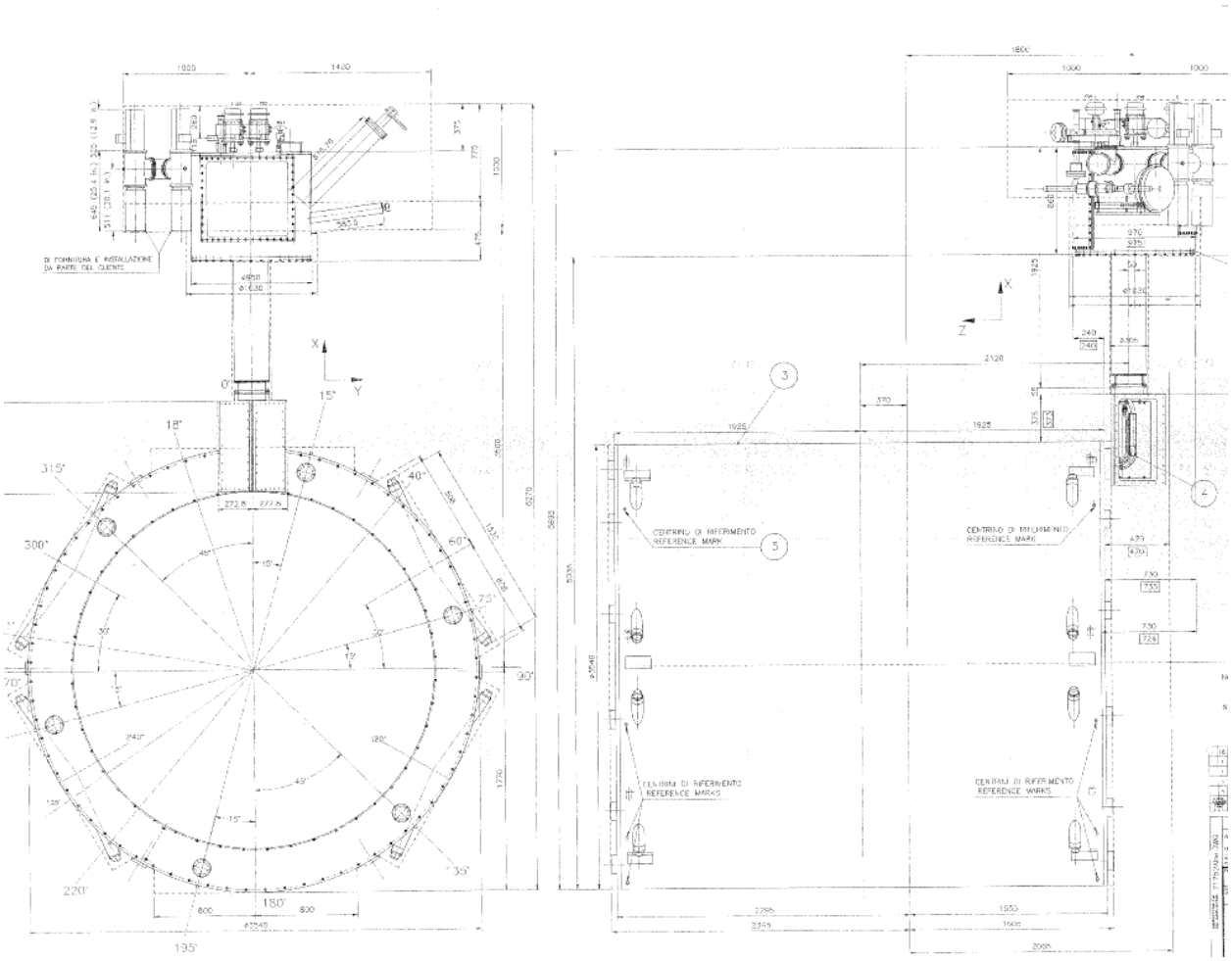

SHIELD

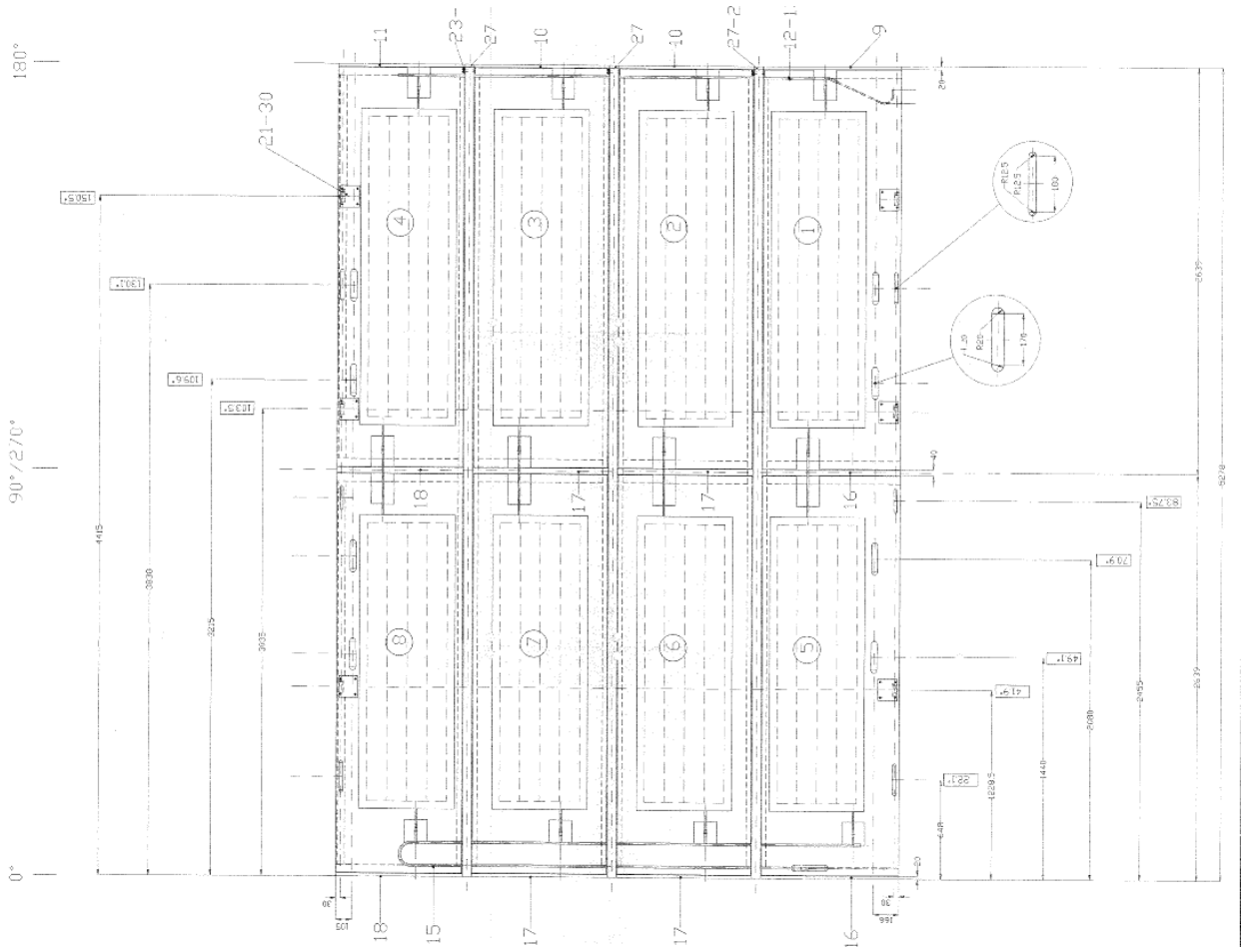
180°
90°/270°
0°
21-30
11
23-
27
10
27
10
27-2
12-1
9
4
3
2
1
8
7
6
5
18
17
17
16
18
15
17
17
16

CURRENT LEAD POT VESSEL

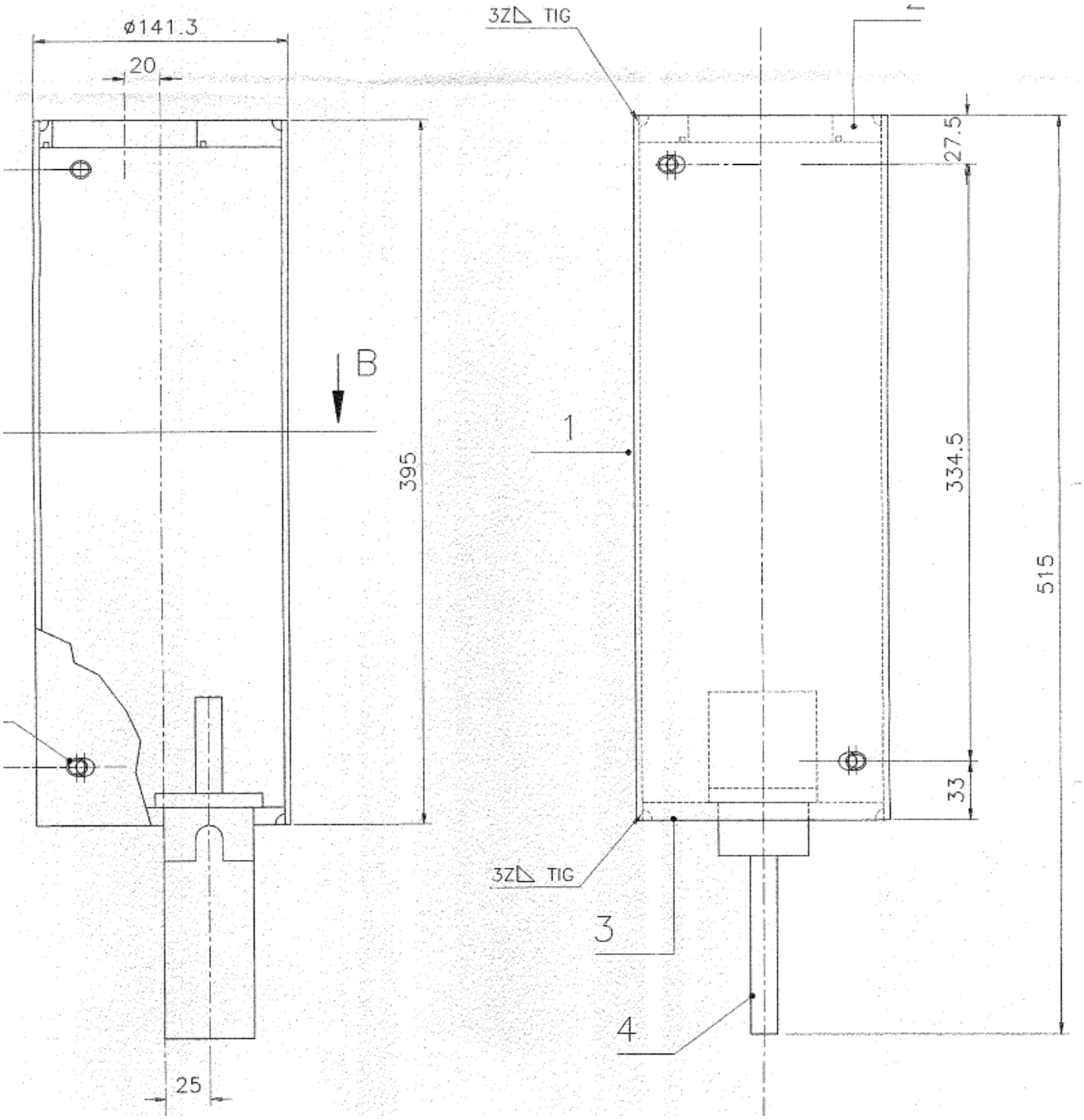
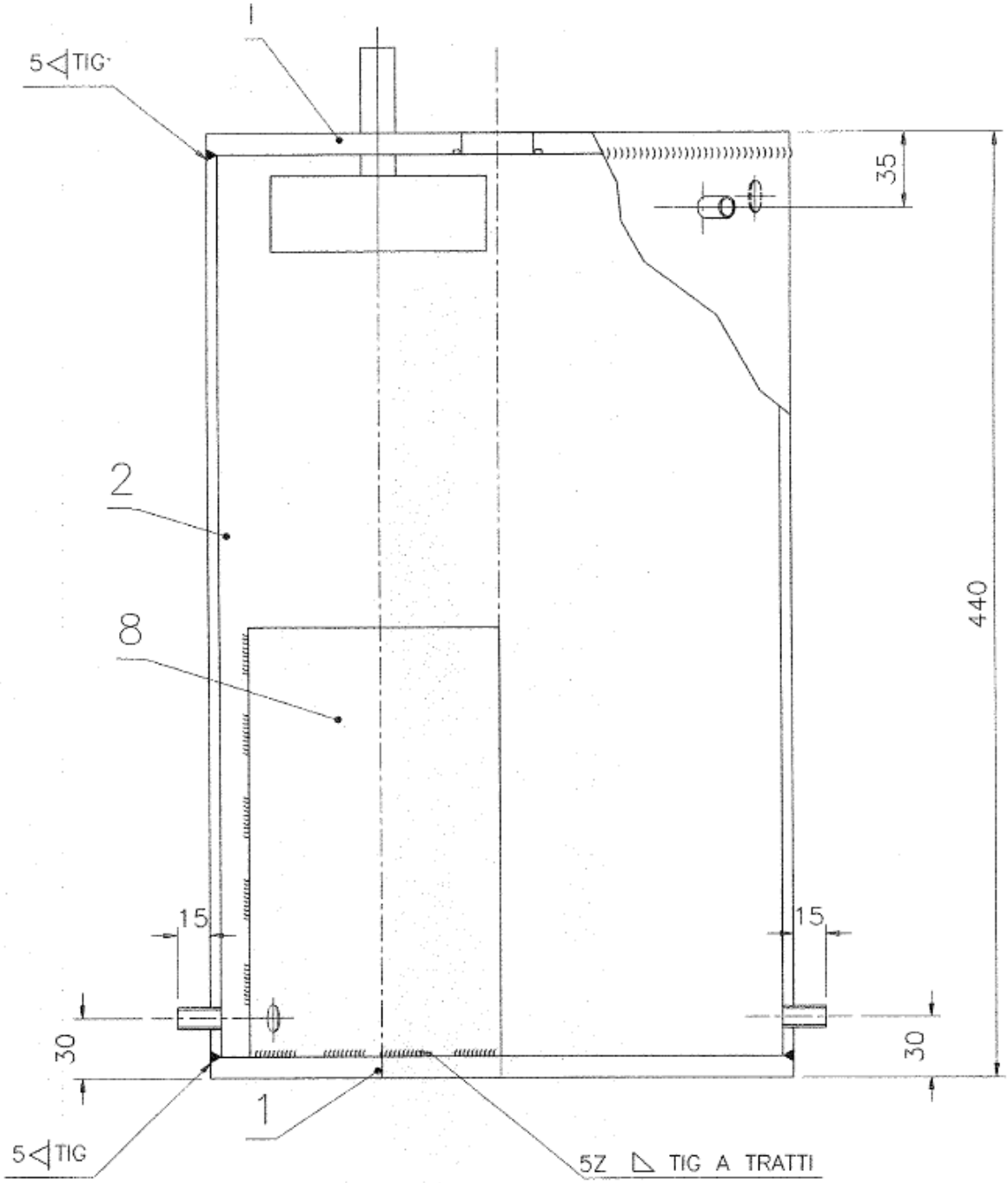
Reservoir HELIUM VESSEL/SEPARATOR